BioE153: Basic Electronics for Bioengineers

Jonathan S. Maltz

jon@eecs.berkeley.edu
http://muti.lbl.gov/jonathan/courses/bioe153-2002
510-486-6744

Motivation for studying bioelectronics

- Biological signal quantification is of paramount importance in bioengineering.
- Most sensors convert physiological quantities into a voltage or current signal, which must then be processed into a meaningful quantity.
- Most actuators used in bioengineering are driven by electrical signals. These signals must be clean and accurate to ensure efficacy and safety.

"When you can measure what you are speaking about, and express it in numbers, you know something about it; but when you cannot measure it, when you cannot express it in numbers, your knowledge is of a meager and unsatisfactory kind: it may be the beginning of knowledge, but you have scarcely in your thoughts advanced to the stage of science whatever the matter may be." Lord Kelvin

Topics we will cover:

- Context in terms of "the course so far" - physiological quantities, sensors and actuators.
- Basic circuit analysis - mode analysis and Kirchoff's Current Law
- Operational amplifiers (op-amps)
- Capacitors, inductors and frequency response
- Basic filters and tuned circuits

To explore further:
"The Art of Electronics" Horowitz and Hill
"Electronic Design" Savant, Roden and Carpenter
"Principles of Measurement Systems" Bentley
Recommended classes at Cal: EE145L,M

Notes

Measuring physiological quantities

Try to find examples of sensors and actuators which do not require any bioelectronic signal conditioning:

Physiological quantity/process	**Sensor or actuator**	**Quantity measured or influenced**

Measuring physiological quantities

Now find examples of sensors and actuators which do employ bioelectronics:

Physiological quantity/process	**Sensor or actuator**	**Quantity measured or influenced**

Measuring physiological quantities

Physiological quantity	**Sensor**	**Quantity measured**
blood flow	stethoscope (microphone)	sound of blood flow, heart valve motion
	ultrasound/laser Doppler	Doppler shift off red blood cells
	electromagnetic flowmeter	electromagnetic induction
	gamma camera (PET/SPECT)	radiotracer kinetics
	plethysmograph (optical)	absorbed/reflected infrared
blood pressure	strain gauge load cell	pressure inside cuff
	tonometer	force on arterial wall
nerve/muscle	electrodes (Ag-AgCl, nanoneedles)	electric potential
activiation ({E,M}EG, {E,M}CG)	SQUIDs (B-field sensors)	induced magnetic fields
metabolic rate	gamma camera and radiotracer	glucose utilization
	MRI	blood oxygen levels
chemical concentration	microarray with photodetector	light (luminescence/ fluourescence)

Actuators in biomedicine

Application	Actuator	Quantity influenced
cardiac defibrillation	electrodes and current source	heart function
pacemaker	current source	heart synchronization
electroconvulsive therapy (shock treatment)	electrodes and current source	psychological state
radiation therapy	X-ray source	tumor growth rate
limb replacement	electric motor	limb position
muscle relaxation	ultrasonic transducer	tissue temperature, muscle contracile state
vascular reactivity testing	electrodes and iontophoresis controller	small blood vessel diameter, blood velocity in skin

Typical biolectronic measurement system

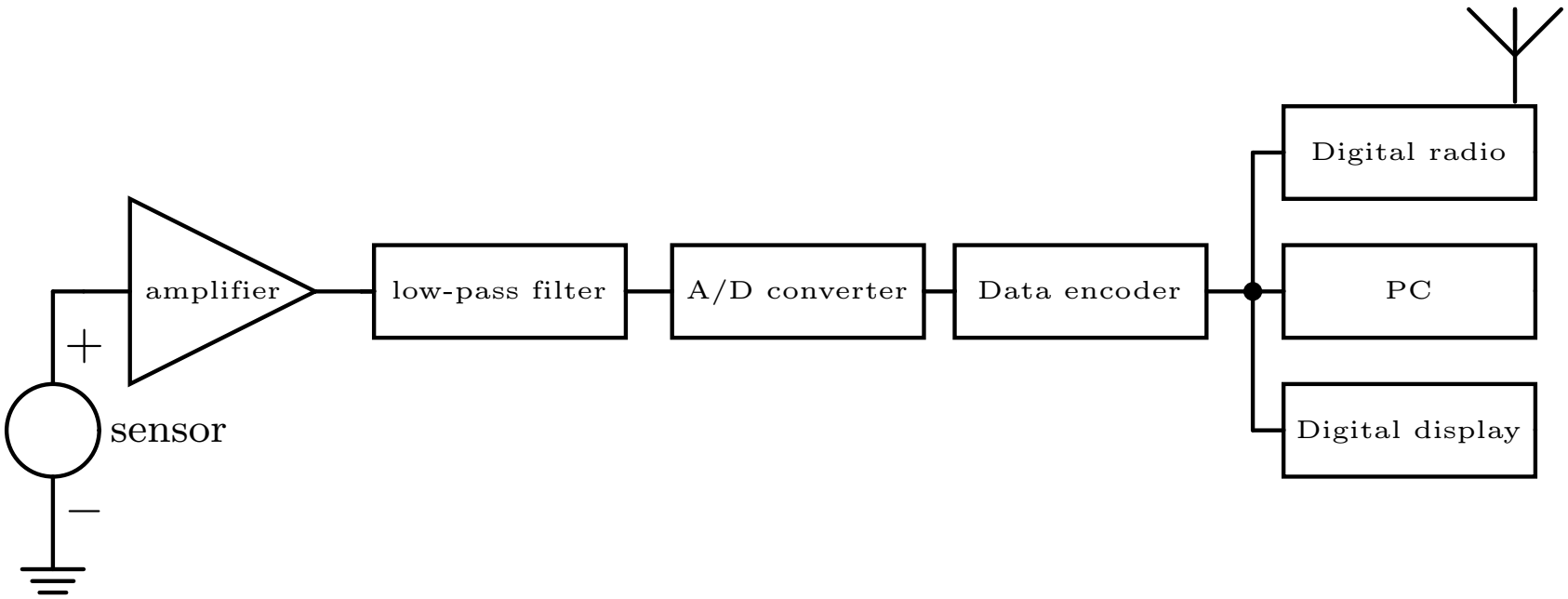

BIOE153: Basic electric circuits

Ideal voltage source:

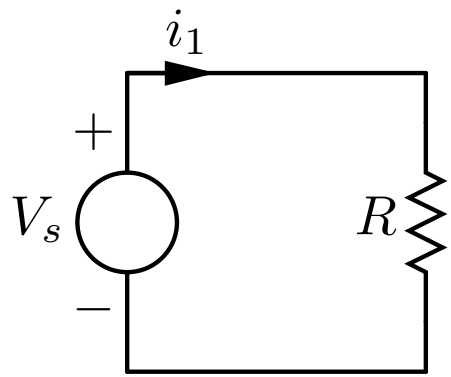

Figure 1: Ideal voltage source connected in a simple circuit.
By Ohm's Law and the definition of an ideal voltage source: $i_1 = \frac{V_s}{R}$.

- **Defines** voltage across its terminals - has no internal resistance. Real world voltage sources always have internal resistance - the terminal voltage _____ as the load resistance decreases.
- A short-circuited ideal voltage source produces _____ current in the circuit.

Ideal current source:

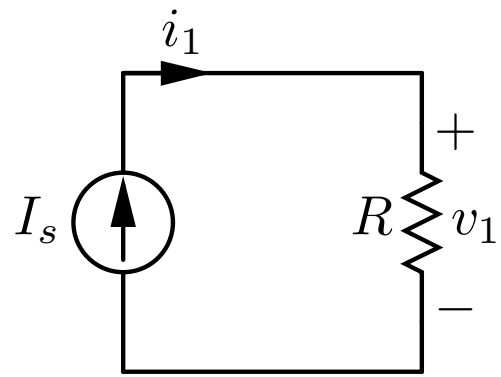

Figure 2: Ideal current source connected in a simple circuit.

By the definition of the ideal current source, $i_1 = I_s$. By Ohm's Law: $v_1 = I_s R$.

- **Defines** the conventional current flowing from its positive terminal,through the external circuit, to its negative terminal. The voltage across the terminals of a current source must change to maintain the current supplied at a constant value,
- A short-circuited ideal current source must have _____ voltage across its terminals.

Important convention in circuit analysis:

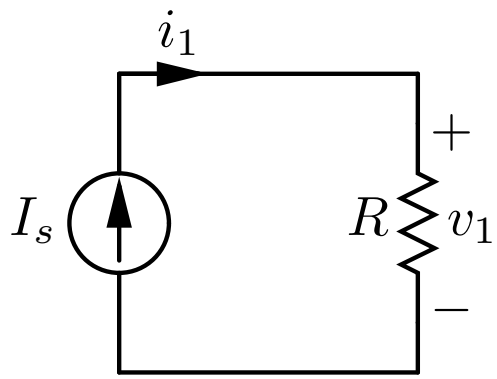

- Voltage drops across resistors, such as the potential v_1 over R, are always defined so that the drop in potential is in the direction of current flow.
- In other words, the terminal at which current enters a resistor, capacitor or inductor must be defined as positive with respect to the terminal at which current leaves.

Real world sources:

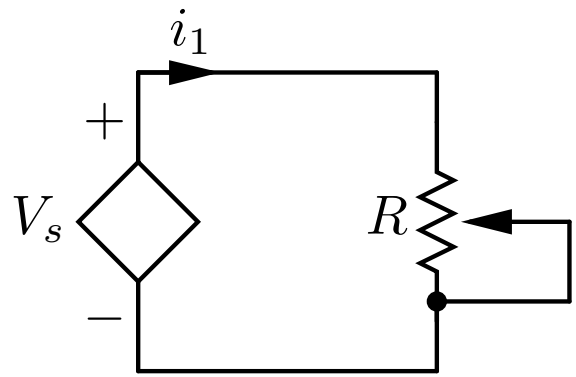

Figure 3: A user controlled voltage source (such as a laboratory power supply) is set to $V_s = 30$V and is connected to a variable resistor. A current i_1 flows through the circuit. The power supply is only rated to produce 1A and will not provide a larger current.

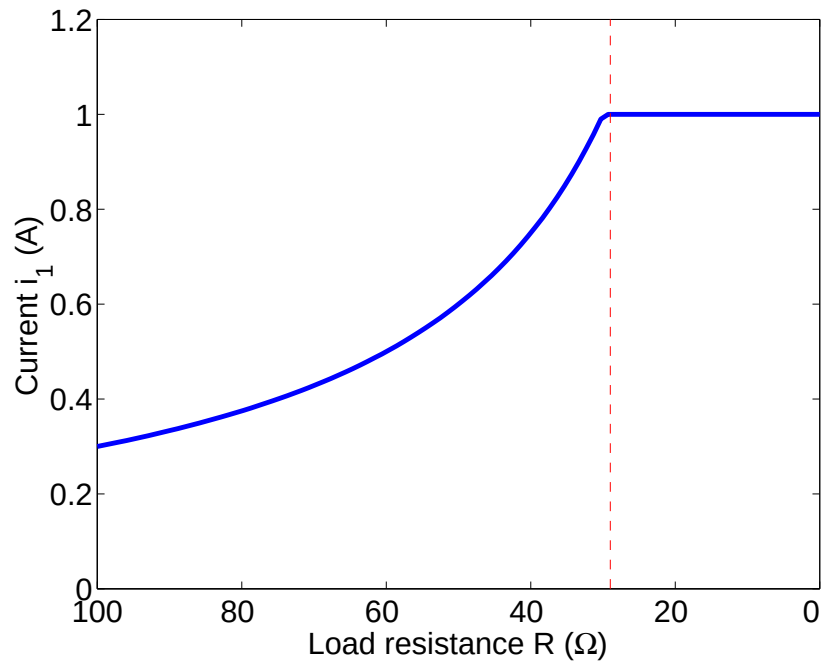

Figure 4: As the load resistance is decreased by adjusting the variable resistor, the current $i_1 = V_s/R$ rises until the output current limit of the power supply of 1A is reached. Before this limit, the source behaves as an ideal voltage source. For loads smaller than 30Ω the source behaves as an ideal current source with $I_s = 1$A.

Circuit analysis: Kirchoff's Current Law:

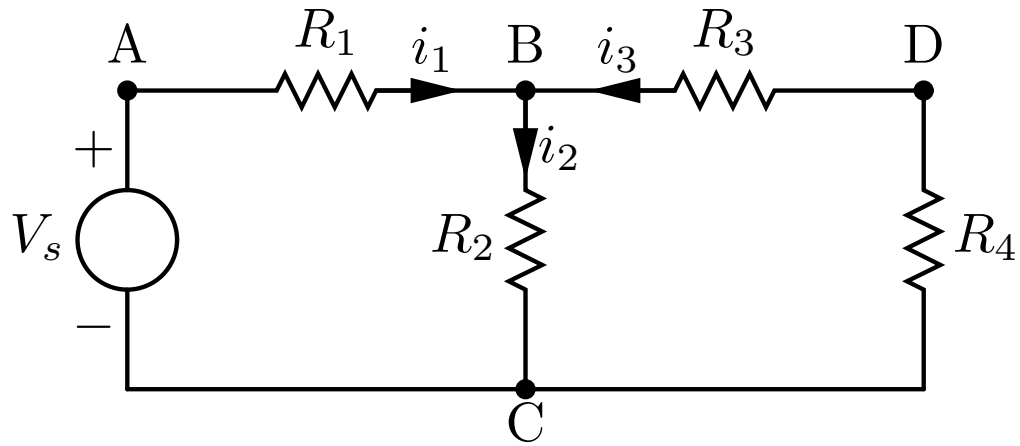

- Circuit state is completely defined by the voltage at each node and the current in each branch.
- The law of conservation of charge implies that **the sum of the currents leaving a node is equal to the sum of the currents entering that node**. This is Kirchoff's Current Law (KCL).
- Problem: Given a value for V_s, what are the voltages at nodes B and D and the values of the three branch currents? (5 unknowns)

Circuit analysis: Kirchoff's Current Law:

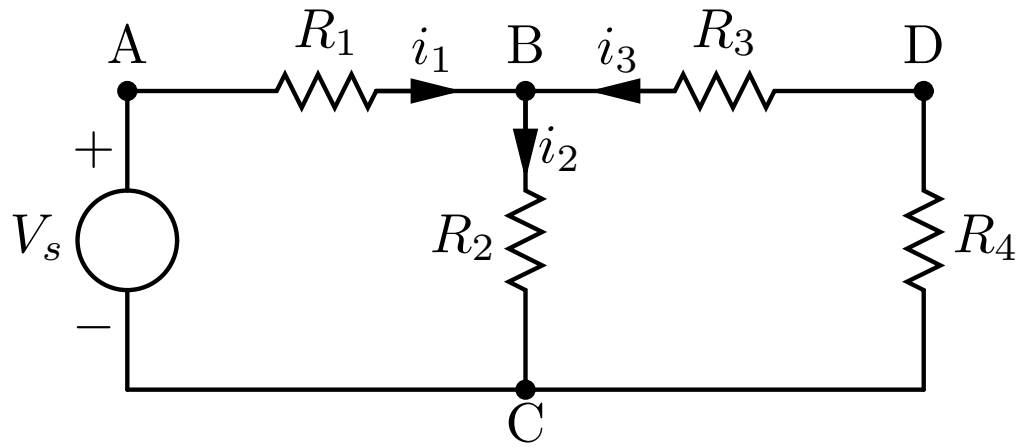

1. We begin by labeling all of the branch currents in the circuit: i_1, i_2 and i_3. Not that the direction we assign to these currents is **arbitrary**. If the current is actually flowing in the opposite direction to our assumption, the current value will be negative.

2. It is convenient to assign a potential of zero to node C.

3. At node B, KCL gives:

$$i_1 + i_3 = i_2. \tag{1}$$

4. Applying Ohm's Law across R_1 gives:

$$i_1 = (V_s - v_B)/R_1. \tag{2}$$

5. Similarly

$$\begin{aligned} i_2 &= v_B/R_2 \text{ and} && (3) \\ i_3 &= -v_B/(R_3 + R_4). && (4) \end{aligned}$$

6. Substituting (2),(3) and (4) into (1) gives:

$$v_B = V_s \frac{R_2(R_3 + R_4)}{R_2(R_3 + R_4) + R_1 R_2 + R_1(R_3 + R_4)}$$

7. The only remaining unknown is the voltage at node D: $(v_D - v_B)/R_3 = i_3 = -v_B/(R_3 + R_4)$ (from (4)). Giving:

$$v_D = v_B \frac{R_4}{R_3 + R_4} \tag{5}$$

8. We originally had 5 unknowns: i_1, i_2, i_3, v_B and v_D. Using node analysis, we solved 5 independent equations. All of the quantities describing the state of the circuit are now known.

9. Suppose $V_s = 30\text{V}$, $R_1 = 100\Omega$, $R_2 = 50\Omega$, $R_3 = 200\Omega$ and $R_4 = 50\Omega$.

Calculate:

$$
\begin{aligned}
v_B &= \underline{\hspace{4cm}} \\
v_D &= \underline{\hspace{4cm}} \\
i_1 &= \underline{\hspace{4cm}} \\
i_2 &= \underline{\hspace{4cm}} \\
i_3 &= \underline{\hspace{4cm}}.
\end{aligned}
$$

1. Write these values onto the circuit diagram and see if they make sense.

2. Do all the currents flow in the directions initially assumed? If so, is our analysis still correct? _____

Reader reference: pp. 54-57, 64 "The Node Method".

Independent reading: pp. 64-68 "Voltage and current dividers"

Exercises on DC circuit analysis

1. Problem 2.6, page 458 of reader.
2. Problem 2.7, page 459 of reader.
3. Solve Problem 2.11, page 459 of reader using the laws for combining parallel and series resistors.
4. Problem 2.28, page 463 of reader.

Amplification and filtering

- Transducers used to measure physiological signals usually produce voltage signals in the microvolt to millivolt ranges. These signals are easily corrupted by noise in the environment. Usually, this means that **signals must be amplified immediately after leaving the sensor.**
- Amplification of the signal almost always results in the amplification of unwanted noise. Amplified signals are typically **filtered** in order to remove as much noise as is possible without sacrificing the signal of interest.
- Most present day bioinstrumentation uses **operational amplifiers** to perform amplification and filtering. These are analog integrated circuits containing very high gain amplifers. "Op-amps" are easy to configure to provide a specific gain and frequency response.

Amplification and filtering: Practical example

The Photoplethysmograph

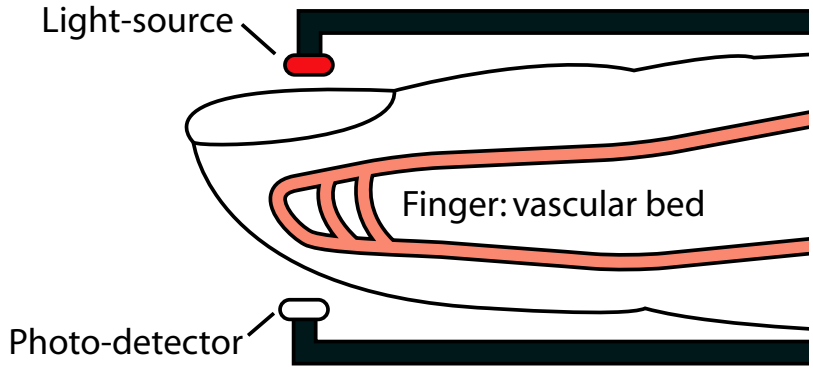

Figure 5: As blood volume in the finger vascular bed increases during systole, the amount of infrared light transmitted through the finger decreases. Thus, the amplitude of the received light is inversely related to the blood volume in the finger. The pulse waveform can therefore be measured non-invasively.

The Photoplethysmograph

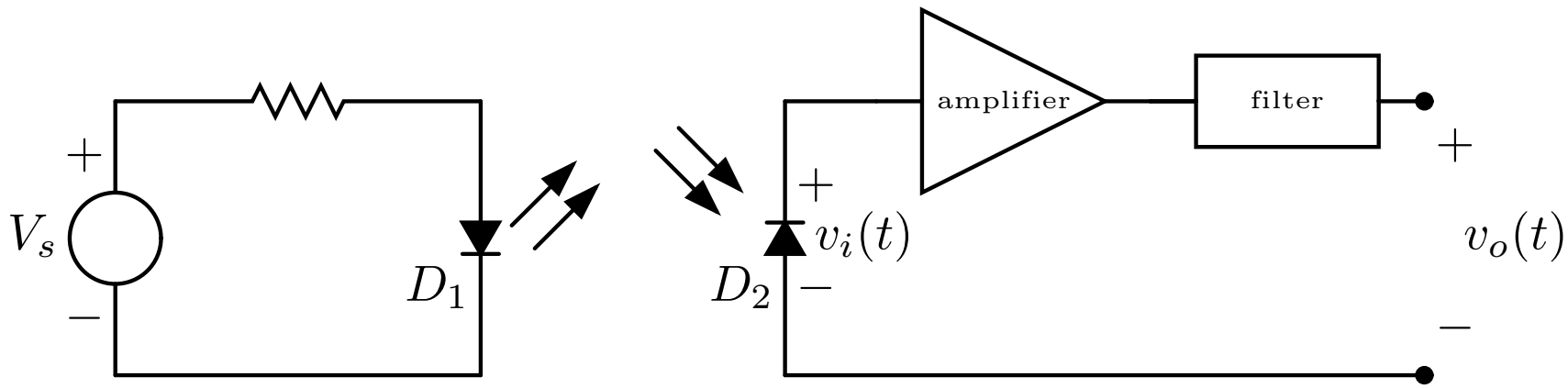

Figure 6: Block schematic diagram of a simple photoplethysmograph. An infrared light-emitting diode (LED) D_1 is supplied with a constant current and produces constant light output, which radiates into the vascular bed. The scattered and attenuated light is received by photodiode D_2. It is then amplified using an op-amp and then low-pass filtered to produce a pulse waveform signal v_o.

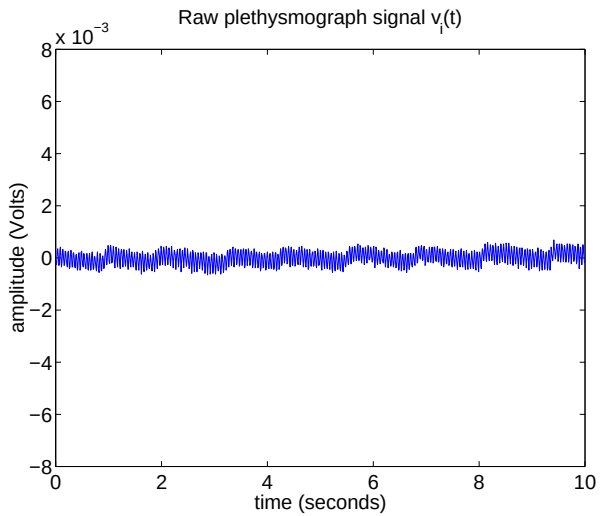

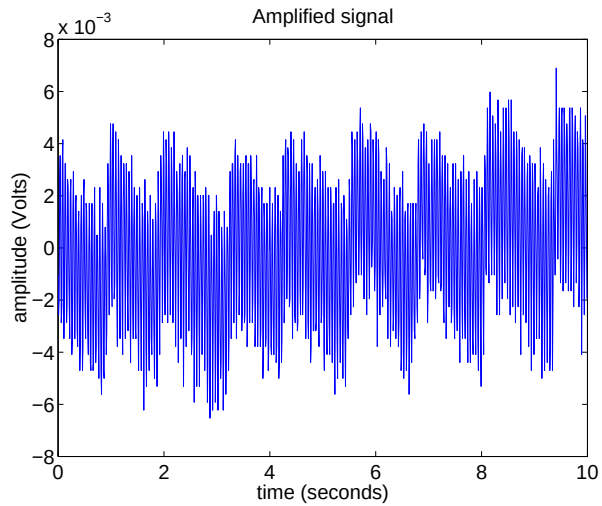

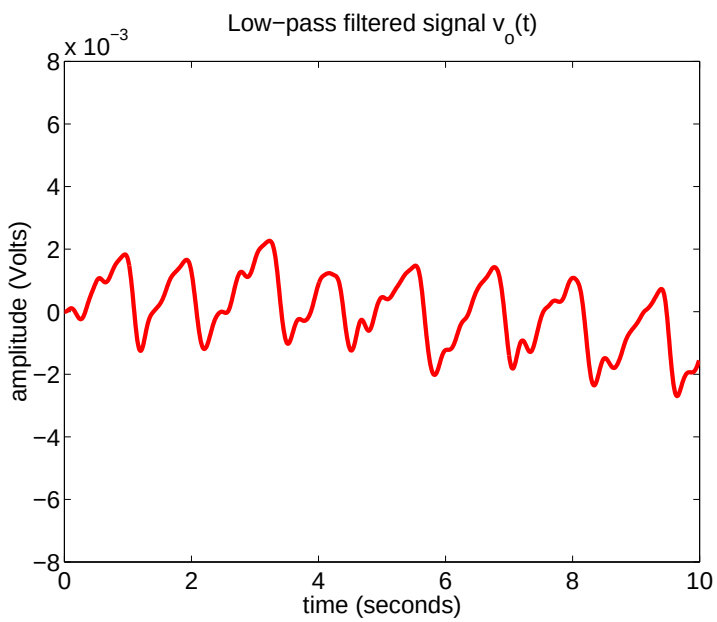

Estimate the pulse rate from the plethysmograph output: _____ beats per minute.

Operational amplifiers

- The op-amp is a microfabricated amplifier with very high gain (typically 10^5-10^6).
- By subtracting some of its output from its input, it is possible to design amplifiers with a specific gain and frequency response. This is termed *negative feedback*.
- The schematic representation of the op-amp is:

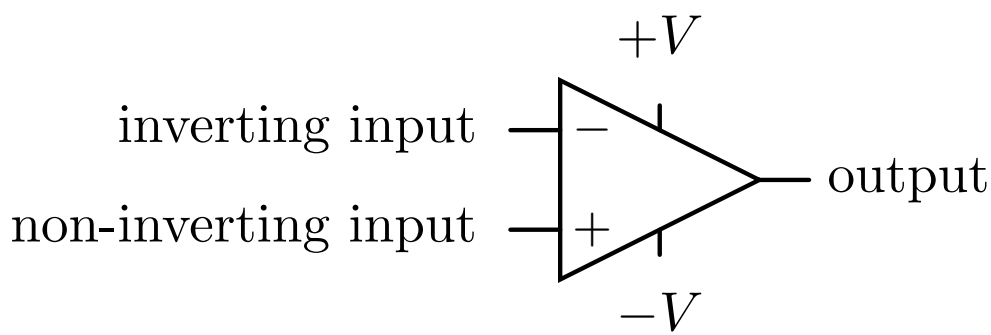

Figure 7: Op-amp symbol. Most op-amps are powered by two power supplies that are symmetric about ground potenial. The positive supply is connected to the pin $+V$ and the negative to pin $-V$.

Real-world operational amplifiers

- The "741" is the best known op-amp chip ever produced. Each IC contains a single op-amp:

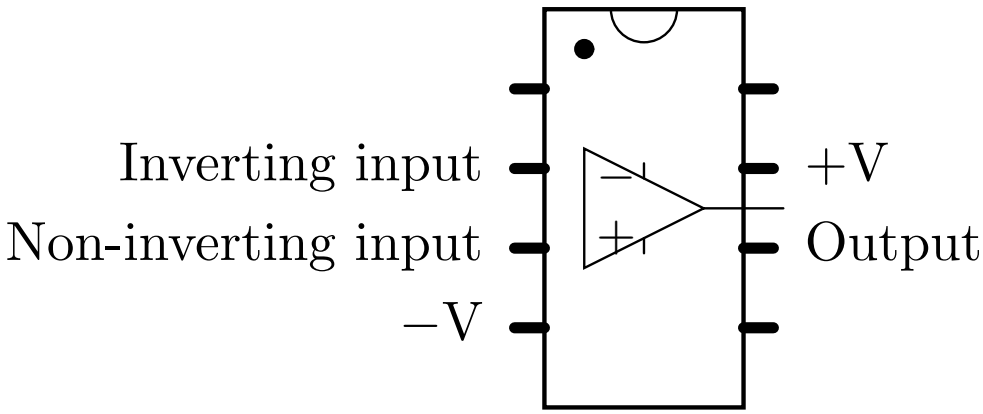

Figure 8: Pin connections of the 741 op-amp IC.

Real-world operational amplifiers

- This is how the 741 looks in real life:

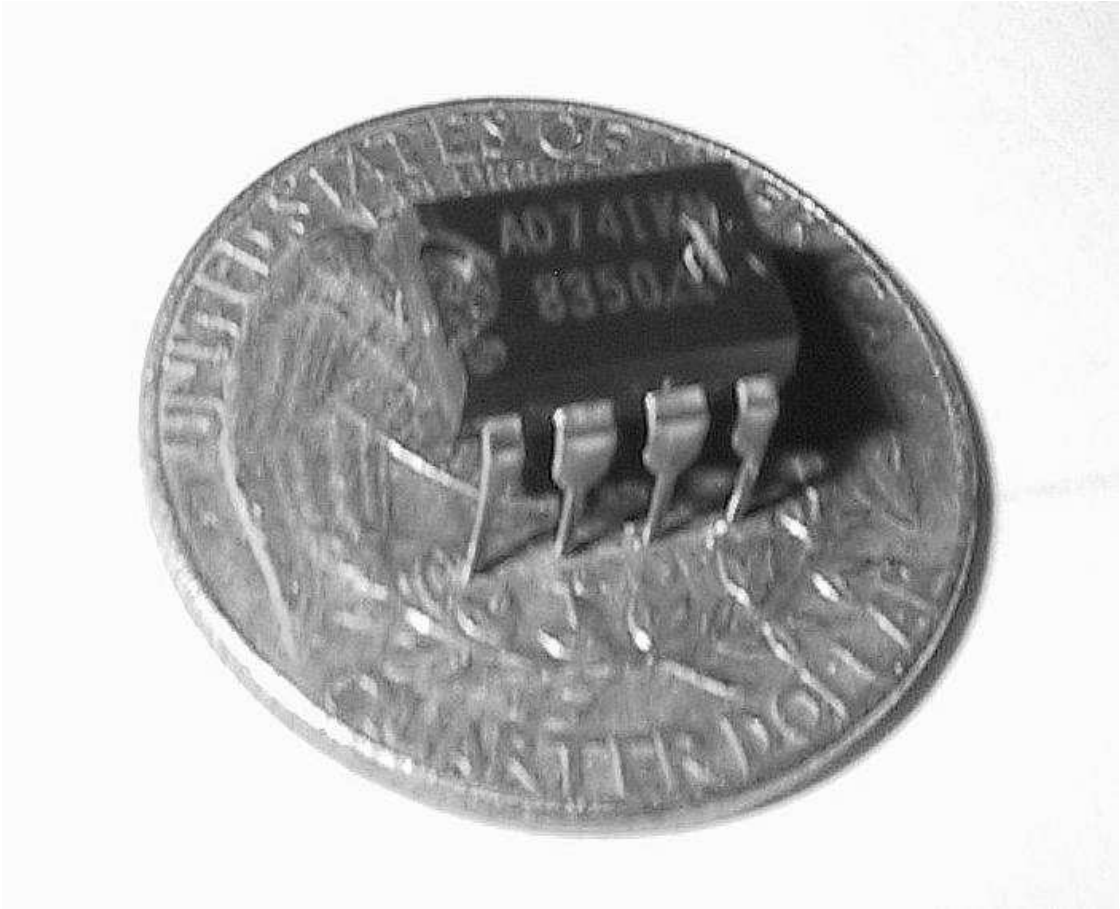

The ideal op-amp

Many common op-amp circuits can be accurately analyzed by assuming that the op-amp used is ideal.

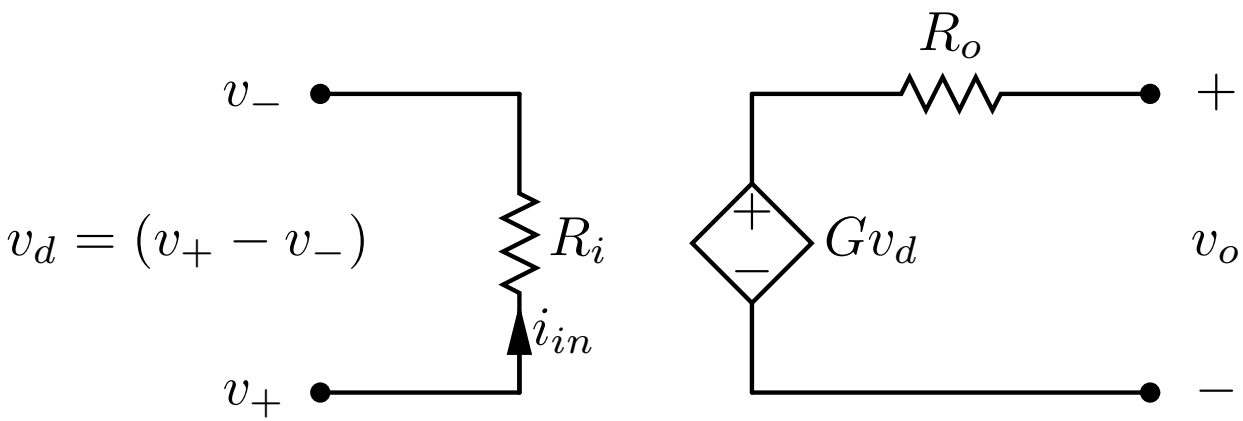

Figure 9: Simple model of the op-amp. The output voltage is given by $v_o = G(v_+ - v_-) = G\,v_d$ where v_+ and v_i are the voltages at the inverting and non-inverting inputs, respectively.

Simplest op-amp circuit: Op-amp comparator

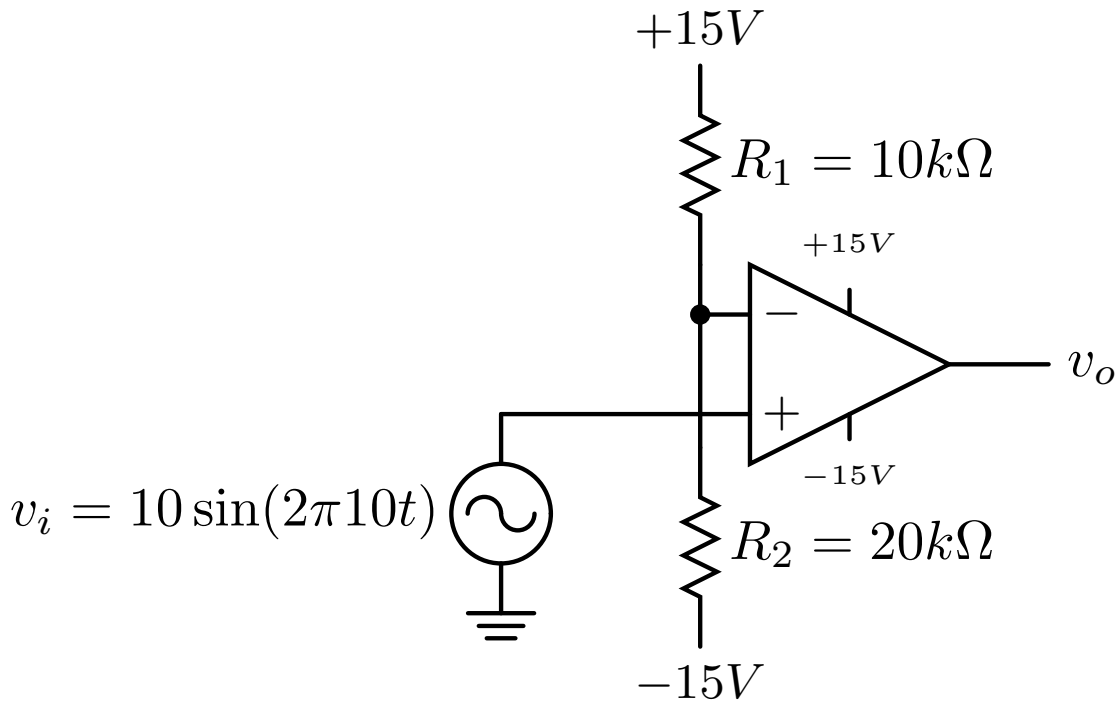

Figure 10: At inverting input: $v_- =$ ____ V.

NOTE: Dots denote connections between crossing wires. v_+ is NOT connected to v_- in this circuit.

Op-amp comparator: a non-linear circuit

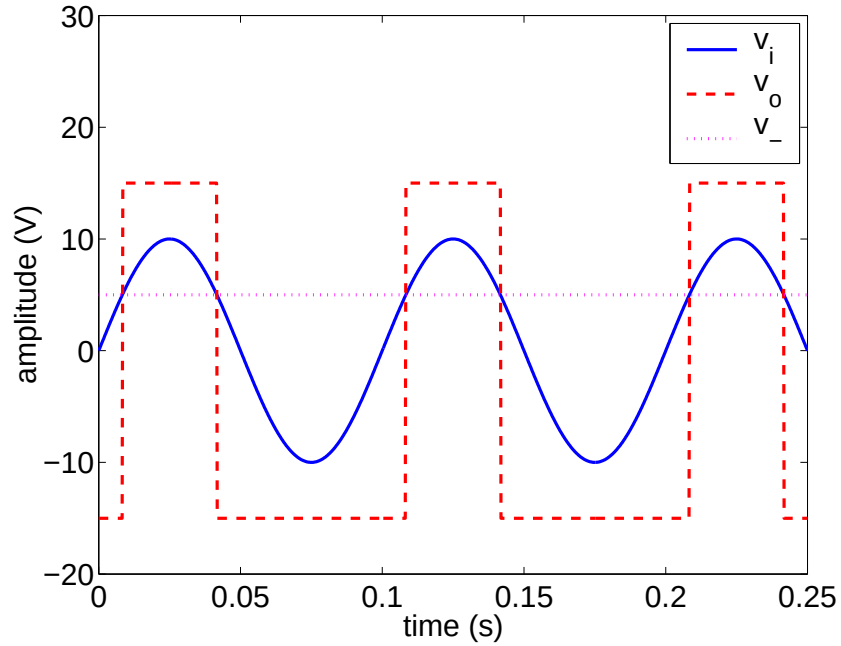

Figure 11: Owing to the very high gain of the op-amp, when the voltage at v_+ exceeds that at v_-, the output tries to go to $+\infty$ volts. Since the supply voltage is only +15V, the output *saturates* at 15V. When v_- is greater than v_+ the output saturates at the negative supply rail.

Ideal op-amp assumptions

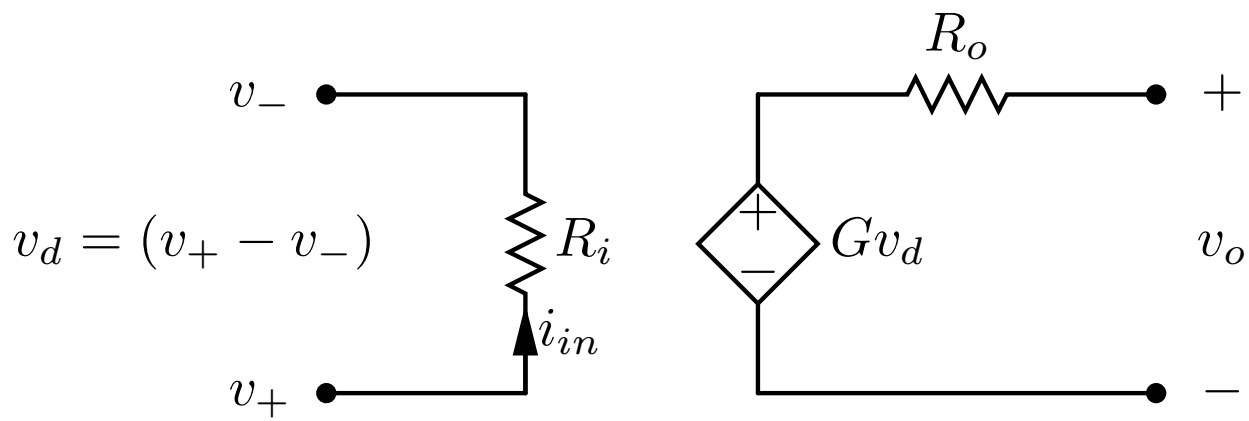

- Infinite input resistance ($R_i \to \infty$). This implies zero input current ($i_{in} = 0$).
- Infinite voltage gain ($G \to \infty$).
- Infinite bandwidth (Same gain G regardless of the frequency of the input signal).
- Zero output resistance ($R_o = 0$).
- Zero output voltage offset ($v_o = 0$ when $v_+ = v_-$).

Linear op-amp circuits: Inverting amplifier

By feeding back some of the output of an op-amp to the inverting input, the op-amp gain can be reduced. Linear op-amp amplifier circuits are created in this way.

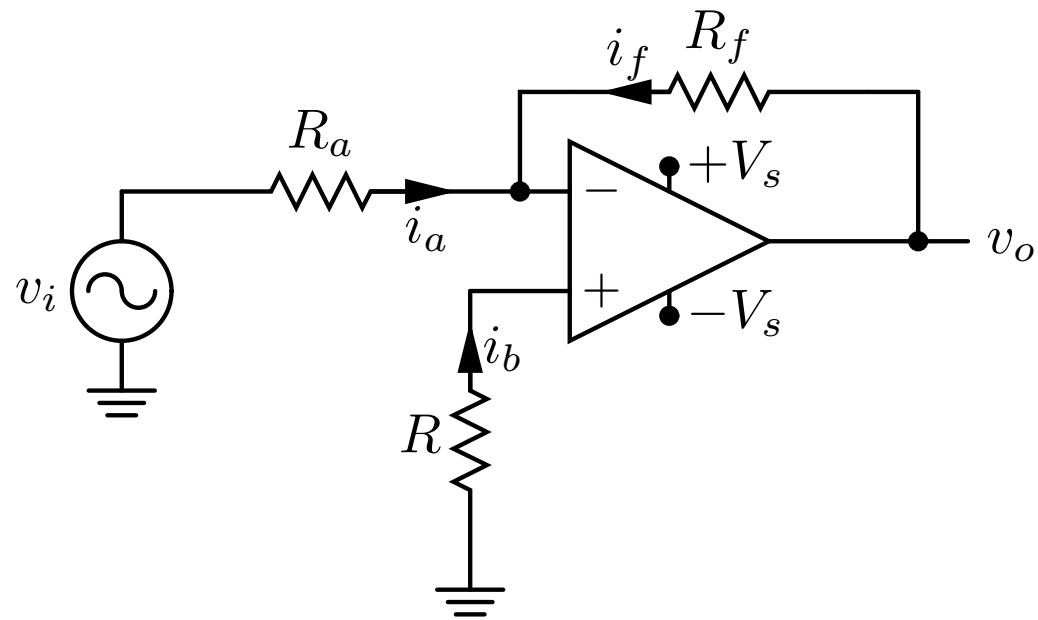

Figure 12: The larger the current i_f fed back to the inverting input, the lower the magnitude of the circuit gain $|v_o/v_i|$.

The inverting amplifier: analysis

In all of our analyses of op-amp circuits we assume the op-amps are ideal. In addition, we invoke the "virtual ground principle", which assumes that $v_+ = v_-$. If the potential difference between the two inputs was not negligible, the output would saturate, as it did in the comparator circuit. (Remember, the ideal op-amp has infinite gain.)

1. By the zero input current assumption:

$$i_b = 0 \quad \text{and} \quad i_a = -i_f \quad \text{(by KCL)} \tag{6}$$

2. At node v_-:

$$\frac{v_i - v_-}{R_a} = -\frac{v_o - v_-}{R_f}$$

3. Solving for the gain v_o/v_i gives:

$$\frac{v_o}{v_i} = -\frac{R_f}{R_a}$$

4. Note that the gain is independent of R. Usually, R is set equal to R_a.

Inverting amplifier design

Design an inverting amplifier to increase the amplitude of a signal by a factor of 2. Show the output waveform when
$v_i = 2.5\cos(2\pi 3t) + 5$.

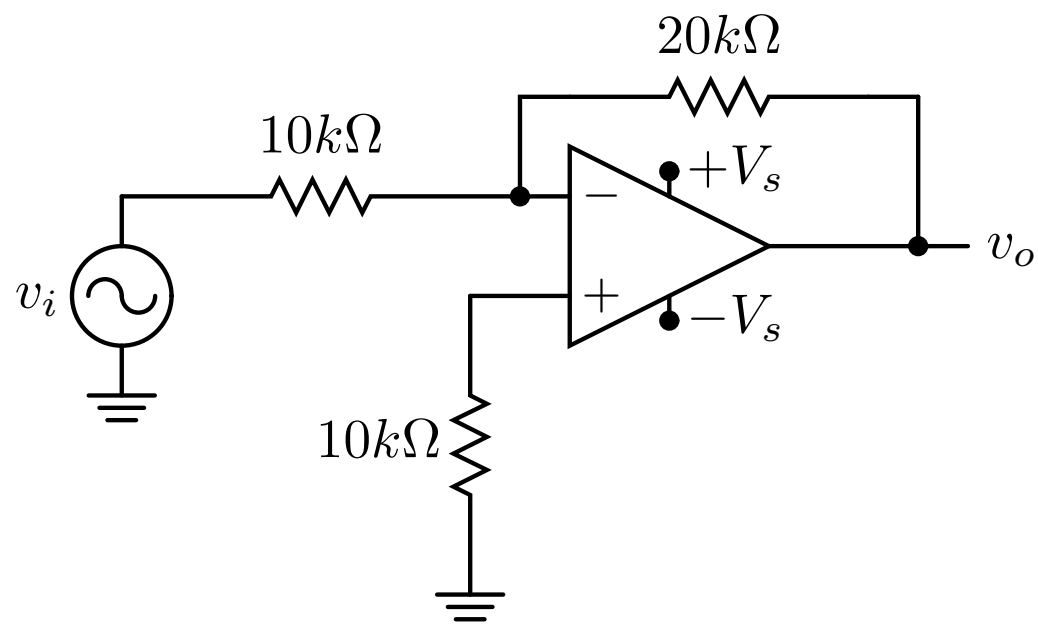

Inverting amplifer

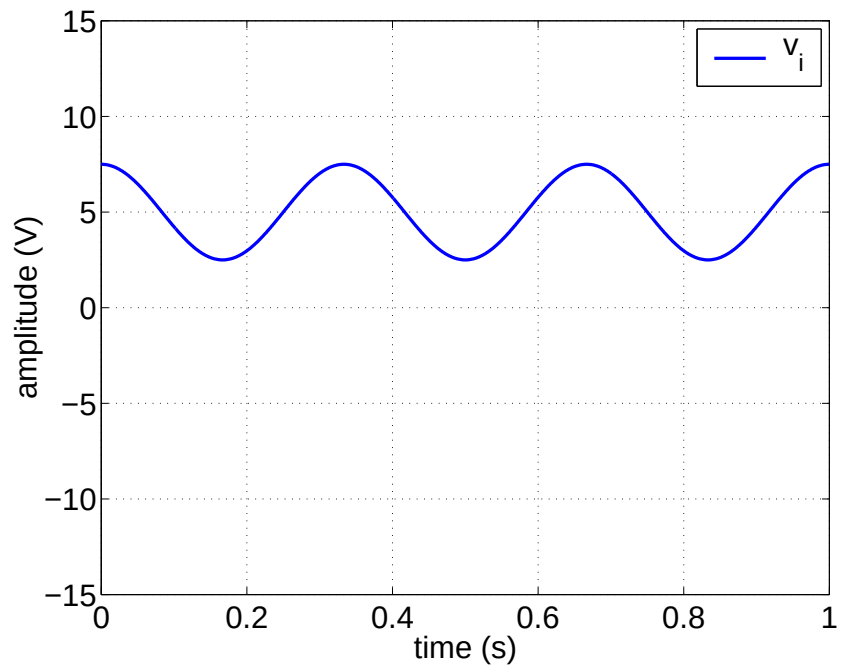

Figure 13: Draw in the output waveform $v_o(t)$.

Non-inverting amplifier

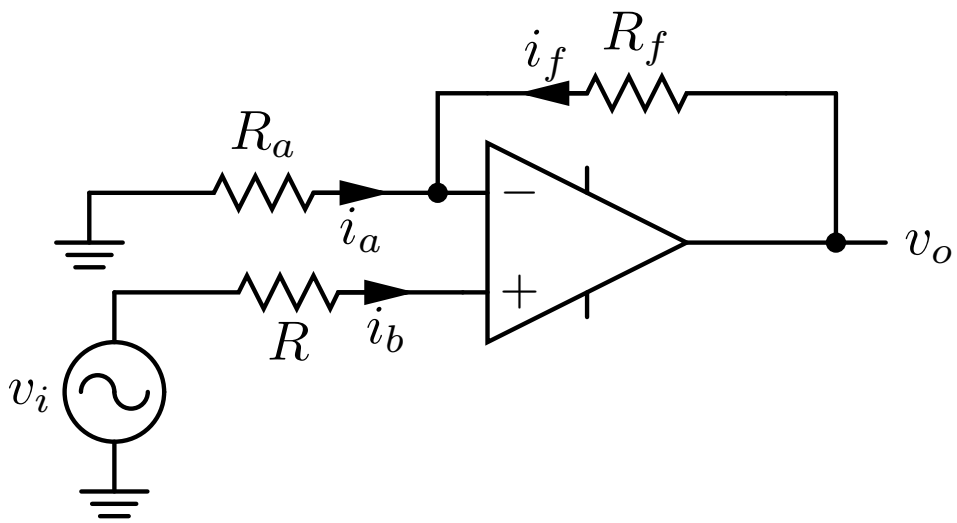

1. By the zero input current assumption:

$$i_b = 0, \quad \text{and} \quad i_a = -i_f \tag{7}$$

2. By the virtual ground principle:

$$v_- = v_+, \quad \text{so} \quad v_- = v_i$$

3. At node v_- :

$$\frac{v_i - 0}{R_a} = \frac{v_o - v_i}{R_f}$$

4. Solving for the gain v_o/v_i gives:

$$\frac{v_o}{v_i} = 1 + \frac{R_f}{R_a}$$

5. Note, again, that the gain is independent of R. Usually, R is set equal to R_a.

Non-inverting amplifier example

Suppose we set $R_a = R_f = 10\,k\Omega$, the op-amp power supply to ± 15V and that $v_i = 2.5\cos(2\pi 2t) + 7.5$. Plot the output voltage $v_o(t)$.

Non-inverting amplifer example

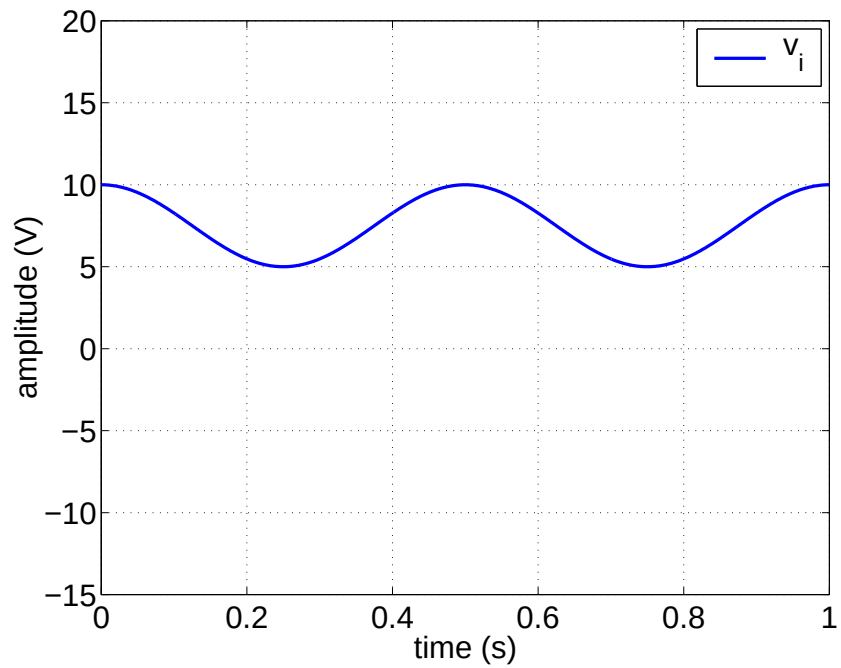

Figure 14: Draw in the output waveform $v_o(t)$.

Differential amplifier

- The inverting and non-inverting op-amp configurations amplify sources connected between the amplifier input and ground.
- In many cases, it is either impossible, undesirable or inconvenient to connect one of the input signal leads to the ground level of the amplifer circuit $\rightarrow$ need *differential amplifer*.

Why?

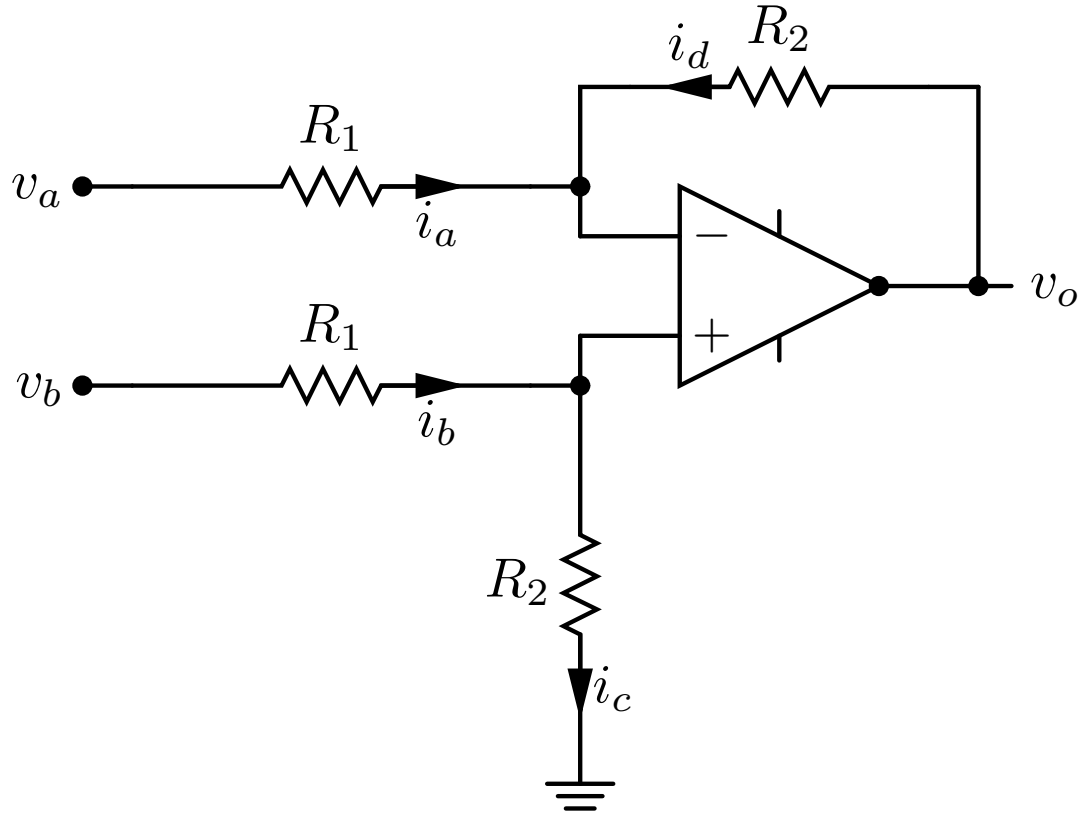

Figure 15: Differential amplifier configuration.

Differential amplifier analysis

Consider the inverting and non-inverting inputs of the op-amp. Assuming, as usual, that no current flows into either terminal we have $i_a = -i_d$ and $i_b = i_c$. Thus:

$$\frac{(v_a - v-)}{R_1} = -\frac{v_o - v_-}{R_2} \quad \text{and} \tag{8}$$

$$v_+ = v_b \frac{R_2}{R_1 + R_2} \tag{9}$$

Now, $v_+ = v_-$. Eliminating these variables from the two equations gives:

$$v_o = \frac{R_2}{R_1}(v_b - v_a) \tag{10}$$

Note that both v_a and v_b are potential differences with respect to ground, but that v_o is independent of the ground potential.

Differential amplifier applications

Noise reduction

- Wires from the sensor to the amplifier pick up noise from the environment.
- Often, this noise is induced more or less equally on both sensor leads. When this is the case, an amplifier having a differential input will cancel this noise.

The Wheatstone bridge

- Sensors which change in resistance or impedance in response to the measured quantity are often placed in a Wheatstone bridge configuration.
- Consider, for example, the cantilever load cell shown in Figure 16. Four strain gauges are placed on the cantilever. When the cantilever experiences a force downward, the resistance of the

two strain gauges on the upper surface increases from R_0 to $R_0(1 + Ge)$, where G is a constant and e is the strain on the sensor. Similarly, the resistance of the two gauges on the lower surface decreases to $R_0(1 - Ge)$.

- When the strain gauges are connected as shown in Figure 17, it can be shown that $v_o = v_s Ge$. This is **independent** of R_o - a very desirable characteristic.
- We see that a differential amplifier is needed to amplify v_o, since this signal is the difference in potential between two points, neither of which are connected to ground.
- In this example, the advantage of using a Wheatstone bridge is that the changes in the value of R_0 due to temperature cancel out.
- As a result, greater measurement accuracy is achieved relative to the case where a single element is used.

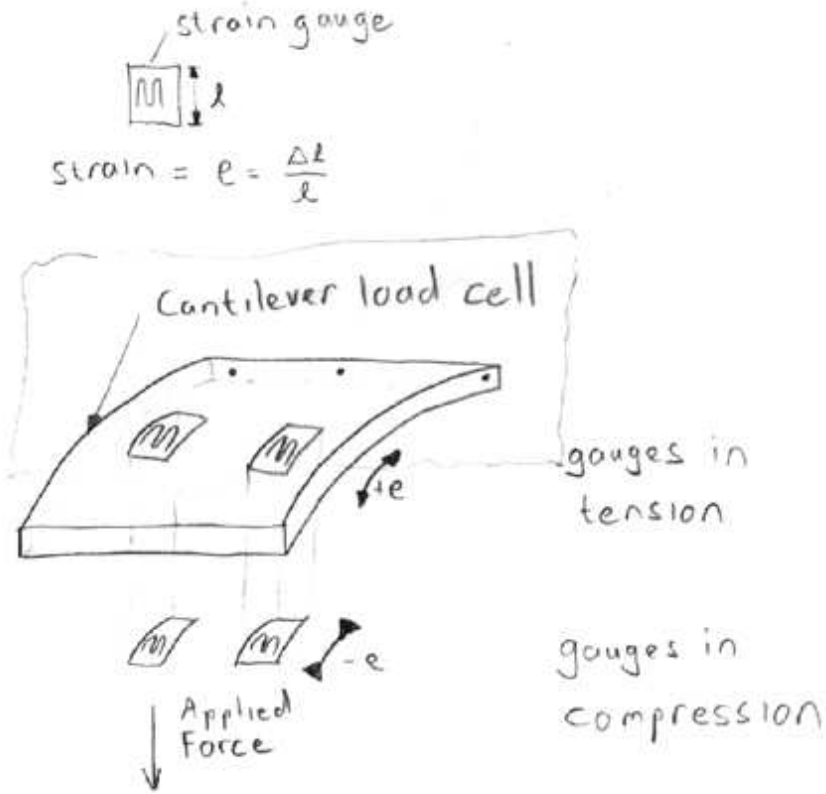

Figure 16: Cantilever load cell to measure vertical forces. Two strain gauges are placed on the upper surface, and two on the lower surface. The strain is defined as $e = \Delta l/l$, where l is the length of the strain gauge before force is applied.

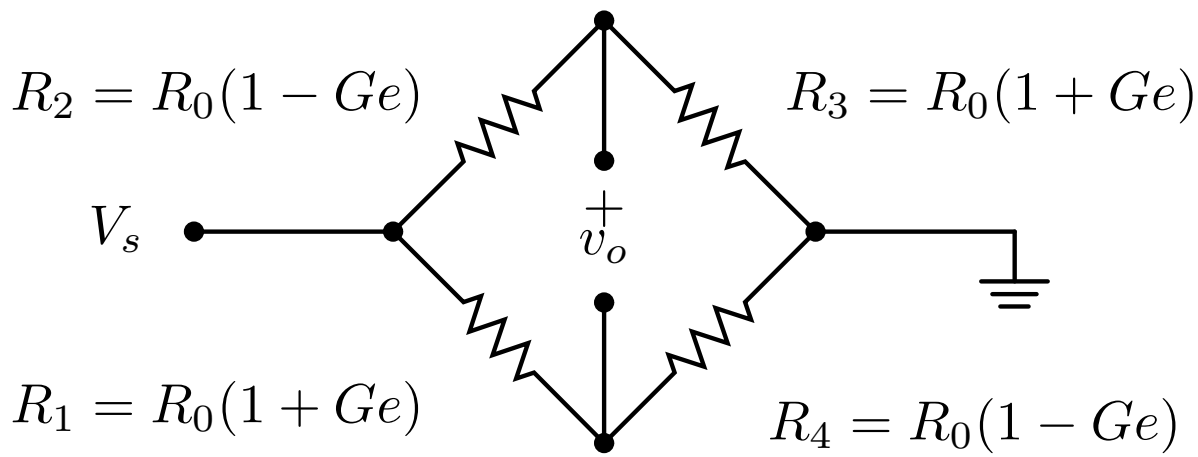

Figure 17: Whetstone bridge configuration. V_s represents the bridge supply voltage and v_o the bridge output voltage. The latter must be amplified using a differential amplifier, as neither output lead can be connected to the supply ground. The resistive elements are four strain gauges placed on a cantilever.

Capacitors and inductors

- So far, the circuits we have looked at do not contain components that store energy.
- Resistors have **real** resistance and dissipate energy.
- Capacitors and inductors have **imaginary** resistance or **reactance** and store energy.
- Capacitors store energy as an electric field.
- Inductors store energy as a magnetic field.

Capacitors

- Capacitors store charge.
- A capacitor resists attempts to change the voltage across its terminals.
- The amount of charge stored in a capacitor at a certain time is proportional to:
  1. Its capacitance value C (measured in farads)
  2. The voltage across the capacitor terminals

Thus $Q = CV$

- A farad is the number of coulombs of charge a capacitor will store for each volt applied across its terminals. (1 coulomb $= 6.24 \times 10^{18}$ electrons)

Current through a capacitor

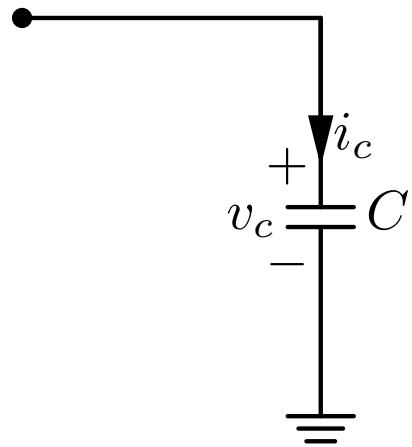

Figure 18: Capacitor symbol and current conventions.

- Charge must move in or out of a capacitor to change the voltage across its terminals.
- This charging current is given by:

$$i_c = C\,\frac{dv_c(t)}{dt}$$

- i_c has a negative value when the capacitor is discharging.

Capacitors in AC circuits

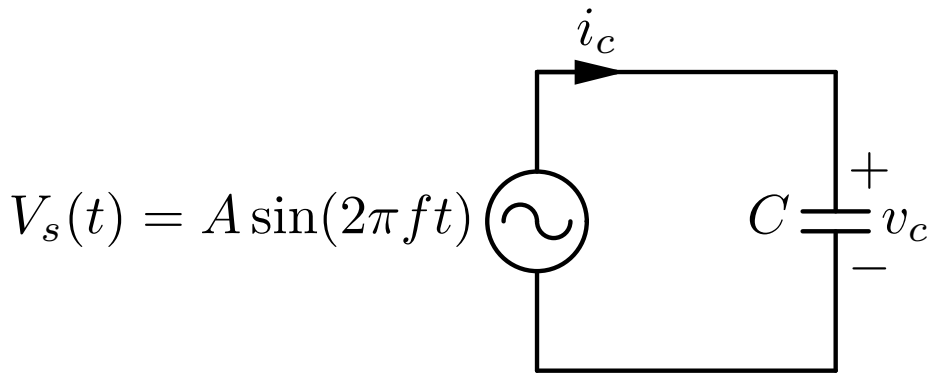

Figure 19: Capacitor in steady-state AC circuit.

- In Figure 19, $v_c(t) = V_s(t)$ so

$$i_c(t) = C\,\frac{dV_s(t)}{dt} = CA\cos(2\pi f t) = CA\sin(2\pi f t + \pi/2)$$

The current through a capacitor **lags** the driving voltage by 90 degrees.

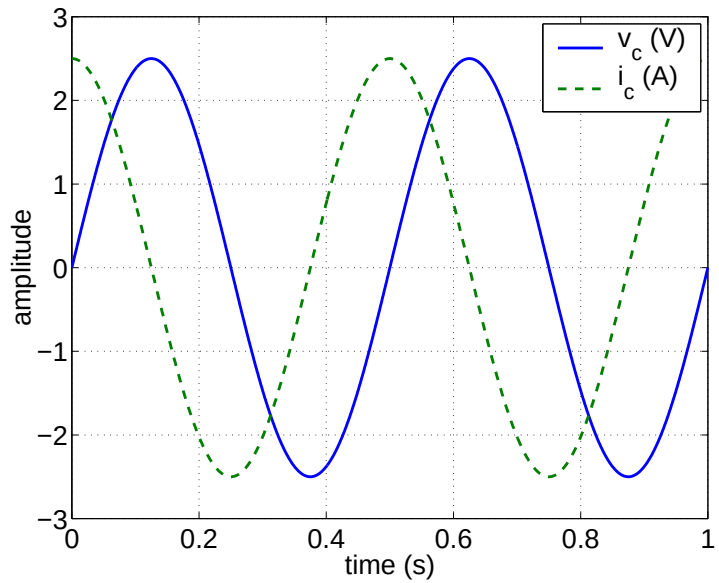

Figure 20: Current through a capacitor driven by an AC voltage source as shown in Figure 19. At $t = 0$, $v_c = 0$ and the capacitor is empty of charge. At this point, the inflow current is maximal. When v_c peaks, current flow stops since there is no change in v_c to resist. The subsequent fall of v_c from its peak is resisted by an outflow current. The existence of this current shows that the capacitor is trying to stop its terminal voltage from falling.

Inductors

- Inductors resist changes in the current flowing through them.
- Inductors do this by generating a voltage that opposes any attempt to change the current flowing.
- This voltage is governed by the equation:

$$v_l(t) = L\frac{di_l(t)}{dt}$$

where L is the inductance of the inductor (measured in henrys).

Inductors in AC circuits

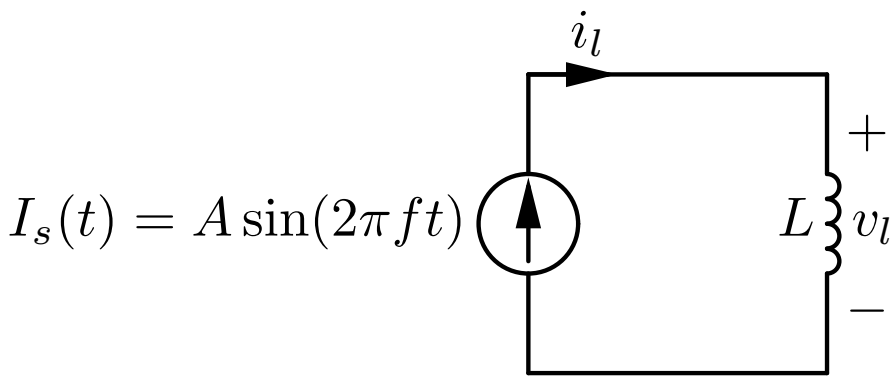

Figure 21: Inductor in steady-state AC circuit.

- In Figure 21, $v_l(t) = V_s(t)$ so

$$v_l(t) = L\,\frac{dI_s(t)}{dt} = LA\cos(2\pi ft) = LA\sin(2\pi ft + \pi/2)$$

- The voltage across an inductor **lags** the current through it by 90 degrees.
- This means the current **leads** the voltage by 90 degrees.
- For the capacitor, the current **lags** the voltage by 90 degrees.

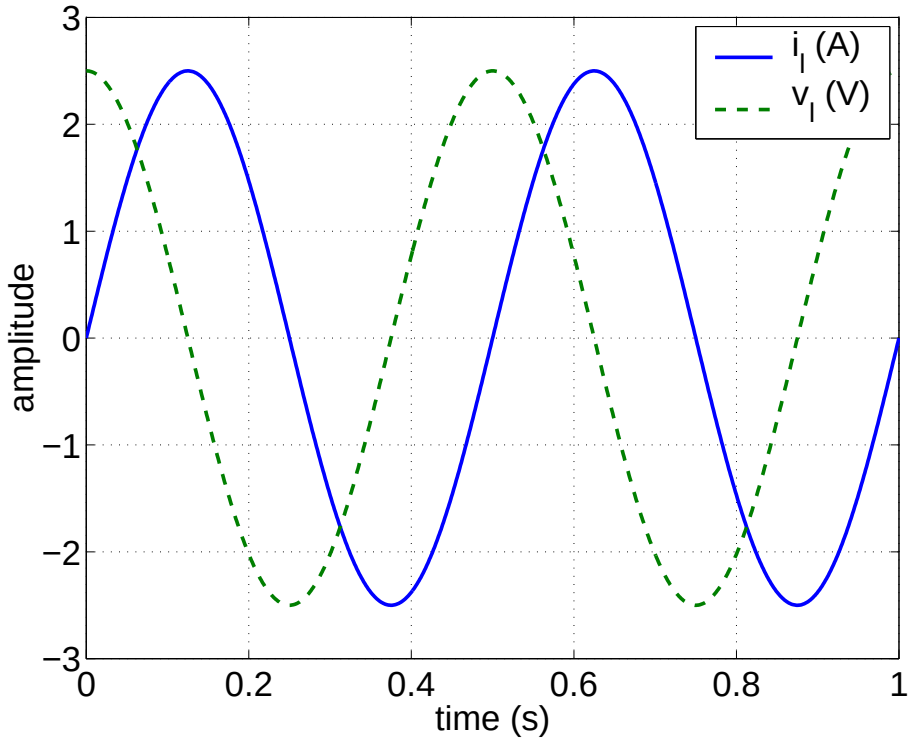

Figure 22: Voltage across an inductor driven by an AC current source as shown in Figure 21. Notice how the inductor tries to oppose changes in the current i_l by developing a potential v_l. Note how $|v_l|$ is maximal at the zero-crossings of i_l when the rate of change of i_l is maximal.

Impedance and phasor analysis

The concept of impedance greatly aids the analysis of circuits containing resistors, capacitors and inductors.

$$\text{impedance} = \text{resistance} + \jmath \times \text{reactance} \tag{11}$$

$$Z = R + \jmath X \tag{12}$$

- R represents the familiar real resistance of resistive elements
- X represents the imaginary resistance of capacitive and inductive elements. Reactance is **frequency dependent resistance**
- Z represents complex resistance, or **impedance**

Impedance and phasor analysis

This representation is a convenient way of expressing mathematically the phase leads and lags of reactive elements.
Most importantly, Ohm's Law applies also to impedances.

- For capacitors: $X = 1/\jmath\omega C = 1/\jmath 2\pi f C$
- For inductors: $X = \jmath\omega L = \jmath 2\pi f L$
- In phasor analysis, sinusoidal (AC) sources are presented as complex phasor quantities.
- A real source producing $V_s = A\sin(\omega t)$ is represented as:

$$V_s = A\,\mathrm{e}^{\jmath\omega t + \pi/2}$$

- A real source producing $V_s = A\cos(\omega t)$ is represented as:

$$V_s = A\,\mathrm{e}^{\jmath\omega t}$$

Impedance and phasor analysis

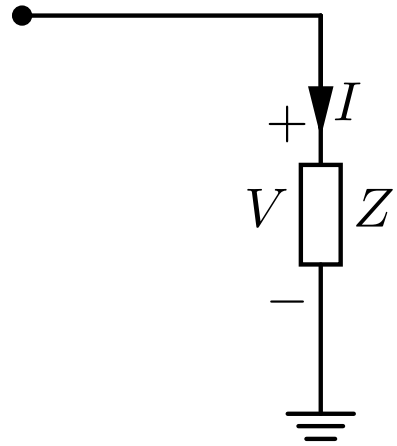

Figure 23: Symbol for complex impedance element with current conventions.

Ohm's Law for impedences: $V = IZ$

Getting from phasors back to the real world:

- The amplitude of a voltage is given by: $|V| = \sqrt{VV^*}$
- The amplitude of a current is given by: $|I| = \sqrt{II^*}$
- The magnitude of an impedance is given by: $|Z| = \sqrt{ZZ^*}$

Phasor analysis example: high-pass filter

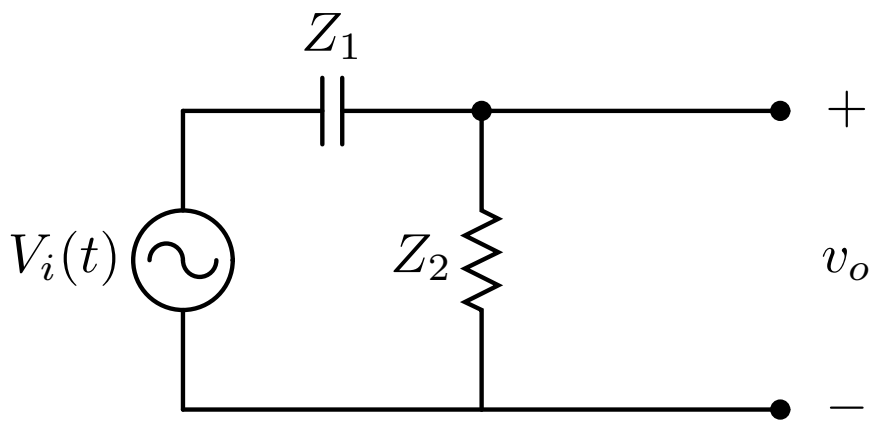

Figure 24: Simple high-pass filter

- $Z_1 = 1/\jmath\omega C_1$, $Z_2 = R_2$
- By voltage divider law:

$$v_o = V_i \frac{Z_2}{Z_1 + Z_2} = V_i \frac{R_2}{R_2 + 1/\jmath\omega C_1}$$

$$G = \frac{v_o}{V_i} = \frac{\jmath\omega C_1 R_2}{R_2 \jmath\omega C_1 + 1}$$

Frequency response

- Note that the gain is a function of frequency.
- To look at the magnitude frequency response of this circuit (gain as a function of frequency), we need to find the magnitude of G:

$$|G| = \sqrt{GG^*} = \sqrt{\frac{\omega^2 C_1^2 R_2^2}{1 + R_2^2 \omega^2 C_1^2}}$$

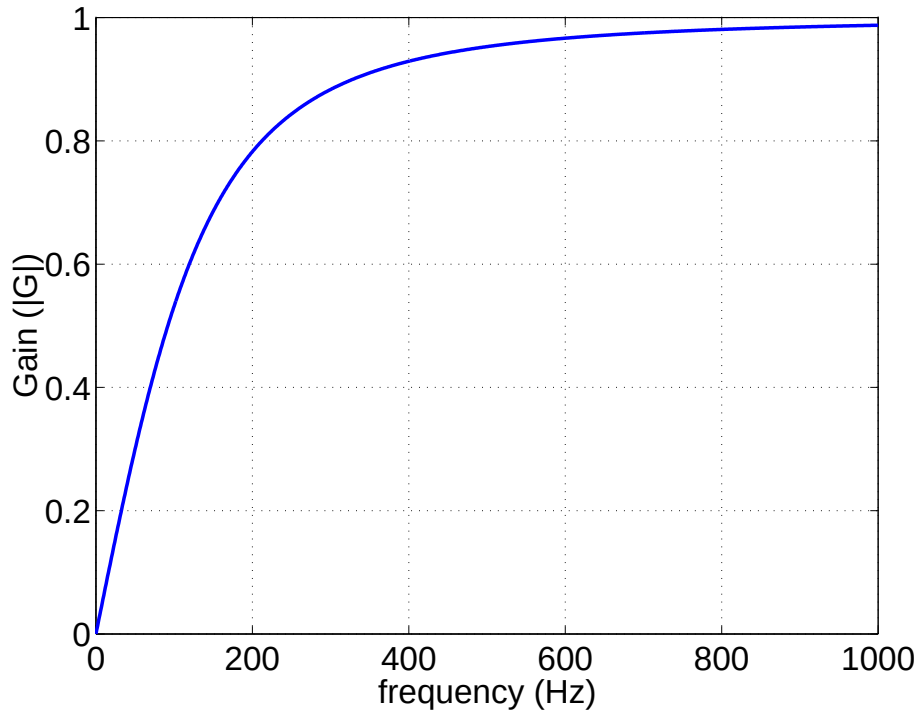

Figure 25: Frequency response of high-pass filter with $C = 1\mu$F and $R = 1k\Omega$

Phasor analysis example: tuned circuit

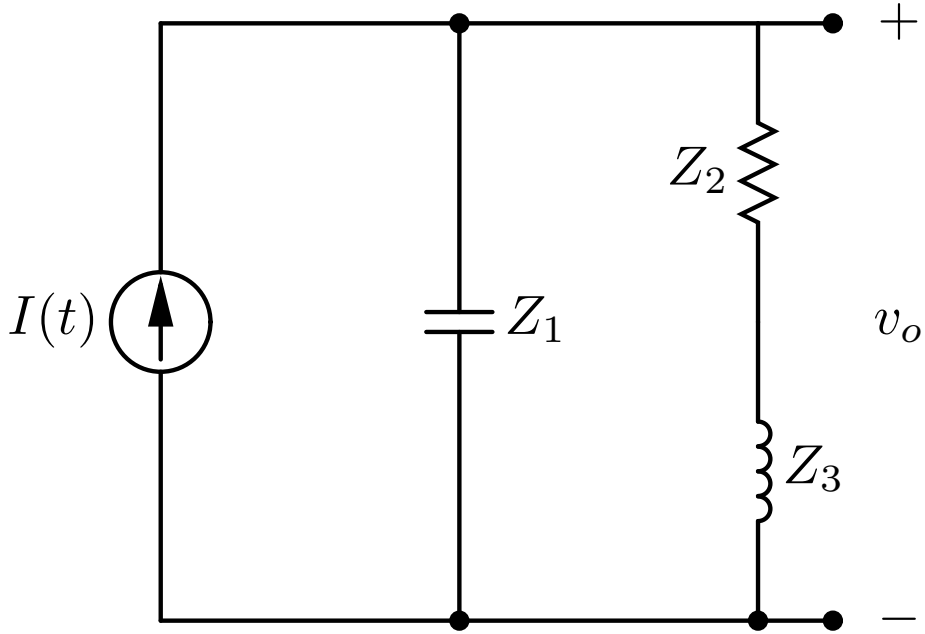

Figure 26: Simple tuned circuit

- $Z_1 = 1/\jmath\omega C$, $Z_2 = R$, $Z_3 = \jmath\omega L$

Phasor analysis example: tuned circuit

- By Ohm's Law and the rule for combining parallel impedances:

$$\begin{aligned} v_o = IZ &= I \times \frac{1}{\frac{1}{Z_1} + \frac{1}{Z_2+Z_3}} \\ &= I \frac{R + \jmath\omega L}{(1-\omega^2 LC) + \jmath\omega RC} \end{aligned}$$

- Thus

$$|Z| = \sqrt{\frac{R^2 + (\omega L)^2}{(1-\omega^2 LC)^2 + (\omega RC)^2}}$$

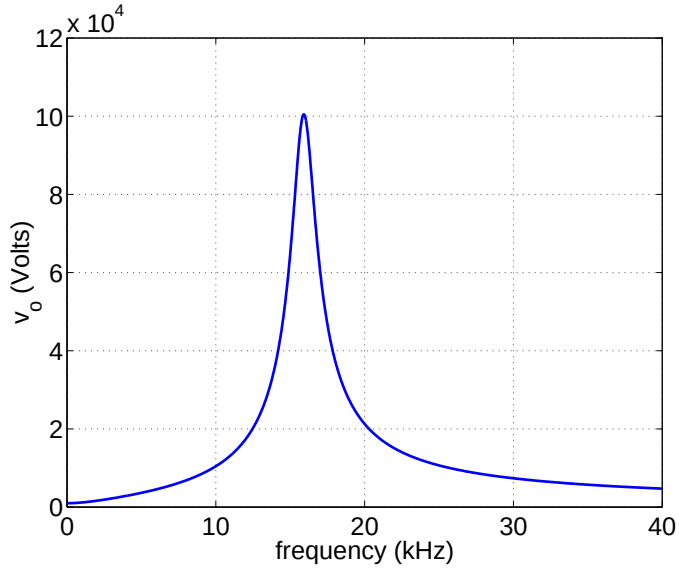

Figure 27: Frequency response of tuned circuit. Here $R = 1\,\mathrm{k}\Omega$, $L = 100\,\mu H$, $C = 1\,\mathrm{nF}$, and the amplitude of I is 1A.

- The tuned circuit provides low impedance to signals with frequencies close to $1/(2\pi\sqrt{LC}) = 15.7\,\mathrm{kHz}$.
- Tuned or RLC circuits allow radios to tune to a specfic frequency band by providing high impedance to unwanted bands.

Reading on capacitors, inductors, impedance and phasor analysis

Reader pages 467-482, 488-497, 502-516.

Exercises

1. Problem 5.2, page 482.
2. Problem 5.3, page 482.
3. Figure 5.15, page 483. Find an expression for the circuit gain. Make a rough plot of the frequency response.
4. Problem 5.8a, page 484.
5. Problem 7.7, page 523.
6. Problem 7.9, page 523.
7. Problem 7.11, page 524.
8. Problem 7.19, page 525.